AUTOMATIC TAPER
(Sheet 3 of 3)
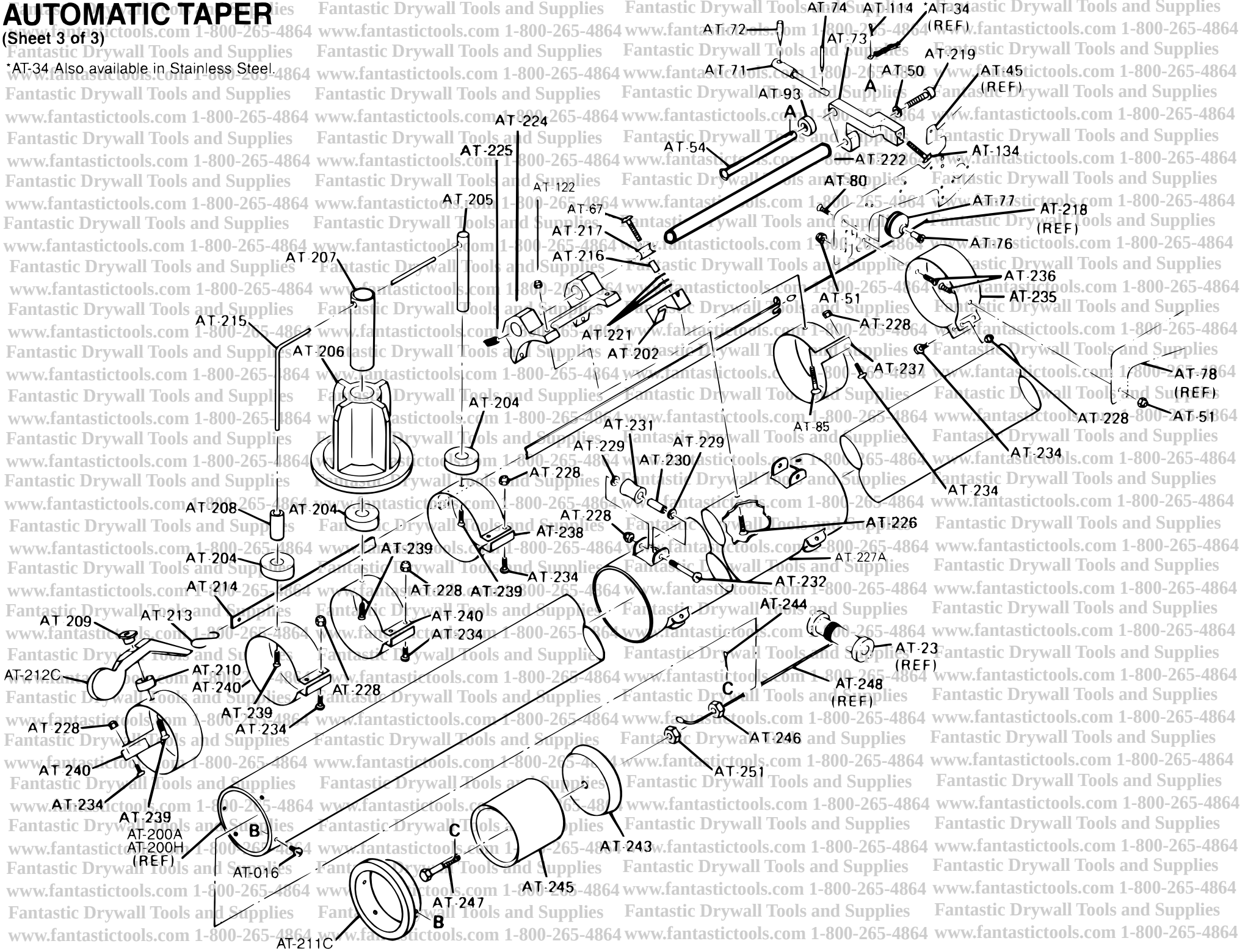
*AT-34 Also available in Stainless Steel.