TAPETECH BOX HANDLE

Prices subject to change without notice

2007

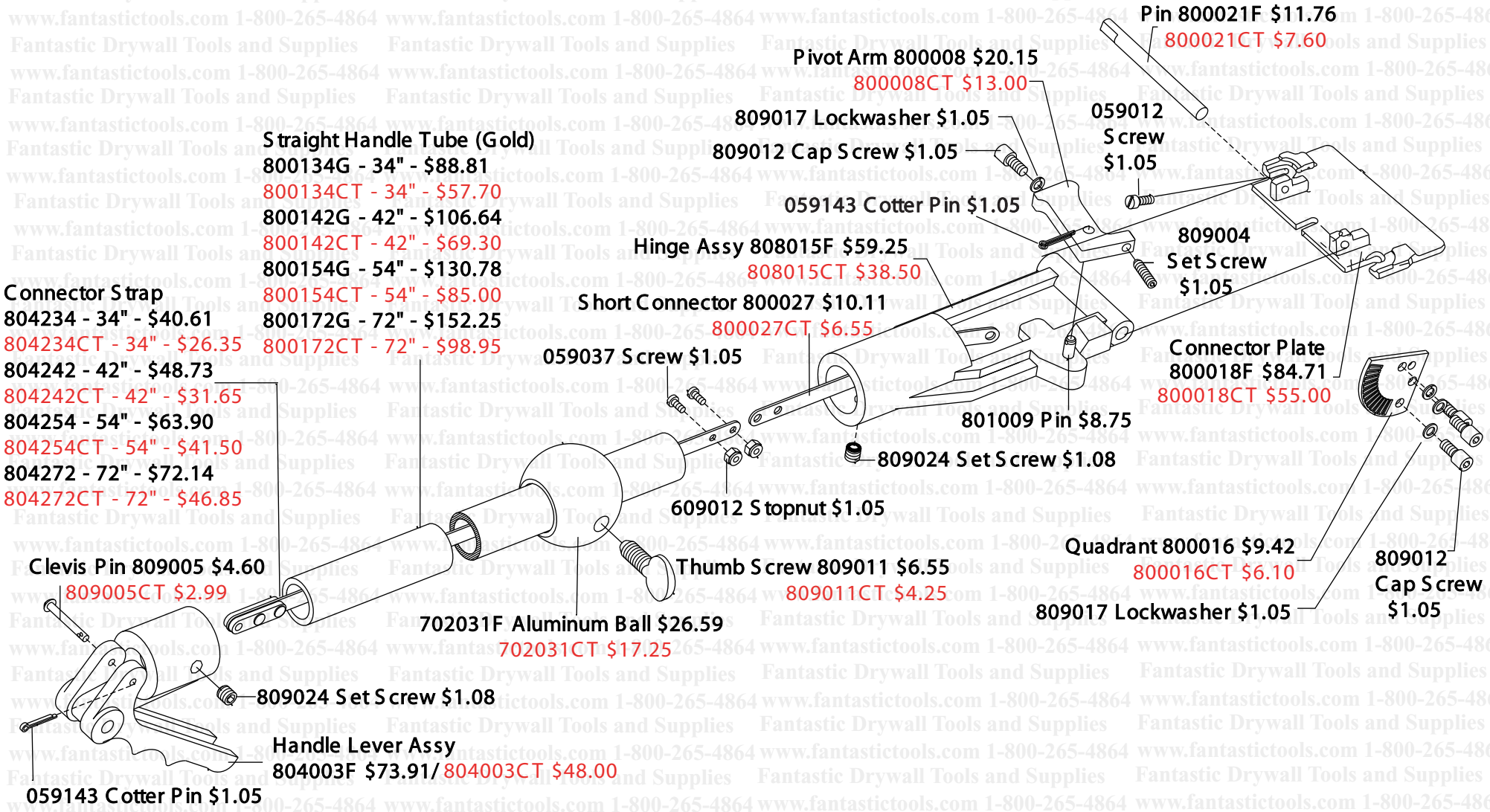

Fantastic Drywall Tools and Supplies www.fantastictools.com 1-800-265-4864